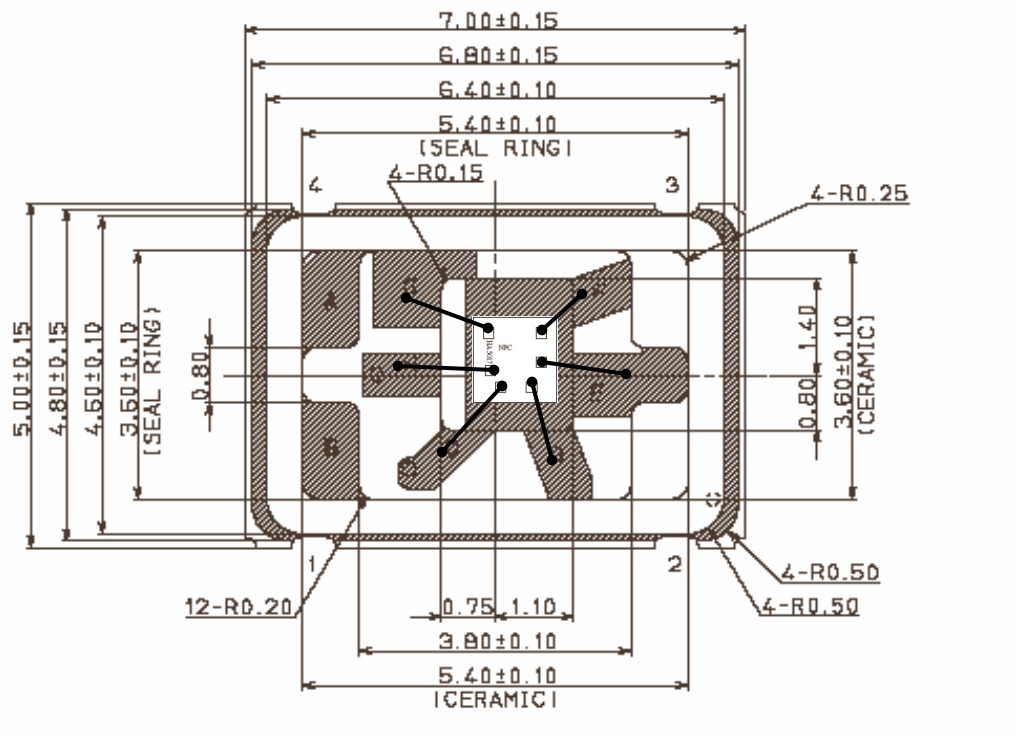

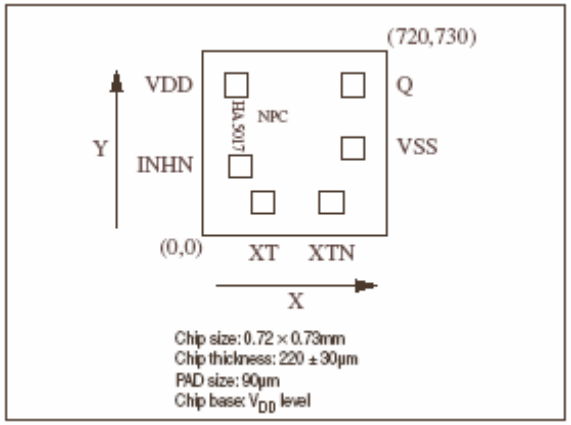

Instructions:

A. Standard process flow for die-attach and wire bond.

B. Conductive silver paste 84-10MISR4 silver epoxy Ablestick is to be used for die attach.

C. Curing: Curing time: 8 Hr ± 20 / - 0 min
Curing temp: 160 ± 10°C
N2 Supply: 5 SCFH min.

Adhesive paste cure temperature is to be 160 degrees C for 8 hours minimum

D. Final assemblies to be nitrogen purged and vacuum packed for transportation. Trays used for shipping ceramic carriers are acceptable.

Notes:

CF5017ALx-2 220 micron thick (x=A,B, C, D)

Item ID	Description	Qty per Assem
S5070CLK6	5x7mm pkg for NPC CMOS osc	1
CF5017ALD-2	CMOS 3OT IC	1

Revision	Date	Reason
B	2005/12/28	Update format for general pulibcation
A	2004/04/05	Change to 84-10MISR4 silver epoxy, reformat
0,2	2005/01/31	Original Issue

VCAmerica

9101 W. Sahara Ave., Suite 105-E10, Las Vegas, NV. 89117
Phone: 702-597-2405 Fax: 702-920-8405
sales@vcamerica.com

Part Number:
ASM5070-CF5017ALD
Revision: A